Danze®

SPECIFICATIONS

PEDESTAL LAVATORY

Model

DC026028 (Pedestal Basin)
DC028110 (Pedestal Column)

Description

- Vitreous china
- Pedestal basin width: 30"
- Widespread faucet mounting 8" centers
- Backsplash
- Overflow
- Install DC028110 with pedestal basin model DC026028 only
- Mounting hardware included

Standards

MEET ASME A112.19.2

Warranty

Five Year Limited Warranty (Vitreous China)

Cirtangular™ Collection

Available Colors
- White (WH)
- Biscuit (BC)

Technical Information

Fixture:	
Basin area	17 7/8" (45.4 cm) x 12" (30.5 cm)
Basin depth	6 1/8" (15.5 cm)
Drain hole	1 3/4" (4.4 cm)

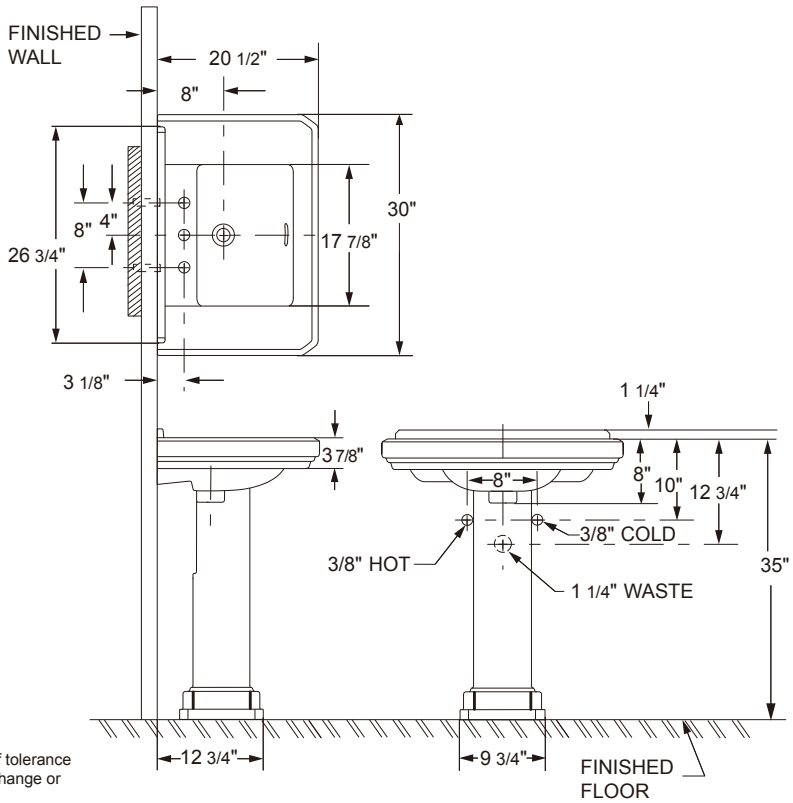

IMPORTANT: Dimensions of fixtures are nominal and may vary within the range of tolerance established by ANSI Standard A112.19.2M. These measurements are subject to change or cancellation. No responsibility is assumed for use of superseded or voided pages.