Pot Filler

MODEL # 31041

Pure Freude an Wasser

GROHE

GROHE America, Inc | 200 North Gary Avenue, Suite G, Roselle, IL 60172
Phone: +1 (800) 444-7643 | Fax: +1 (800) 225-2778 | us-customerservice@grohe.com

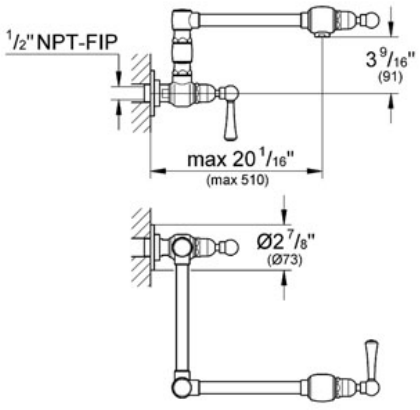

Product Description:
Pot Filler

Standard Specification:
- **GROHE RealSteel®** Stainless Steel Construction produced from 304 stainless steel
- Single hole installation
- Wall mount
- 1/2" - 90°cartridge
- Swivel Spout
- Wall and Spout Shut-Off Valves
- Cold water only
- Spout Reach 20 1/16"
- Max Flow Rate 1.75 gpm (6.6 L/min)

Applicable Codes & Standards:
- Energy Policy Act of 1992
- NSF 61
- ASME A112.18.1/CSA B125.1
- US Federal and State material regulations
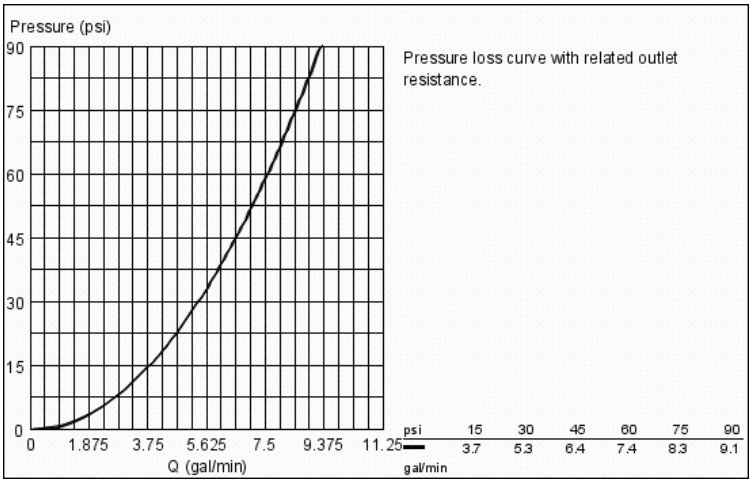
Color:
❑ 31041 SD0 GROHE RealSteel®