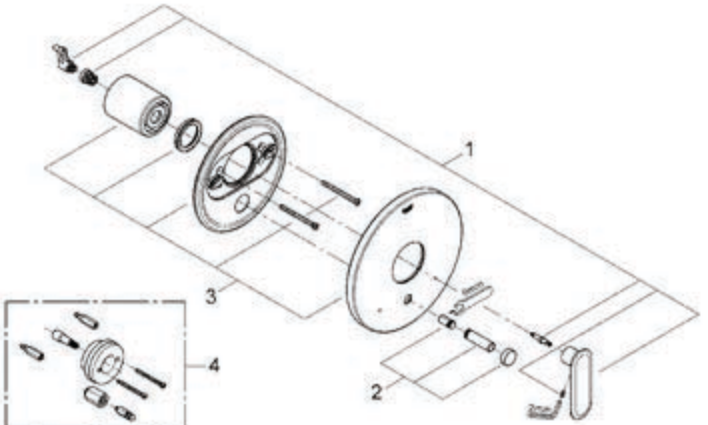

Pos.-nr.	Prod. description	Order-nr.	Units per package
1	PBV lever	47719 000	1
2	Loose key and shield	47655 000	1
3	Escutcheon	47642 000	1
	Special Accessoires:		
4	Extension for Volume Control	47702 000	1