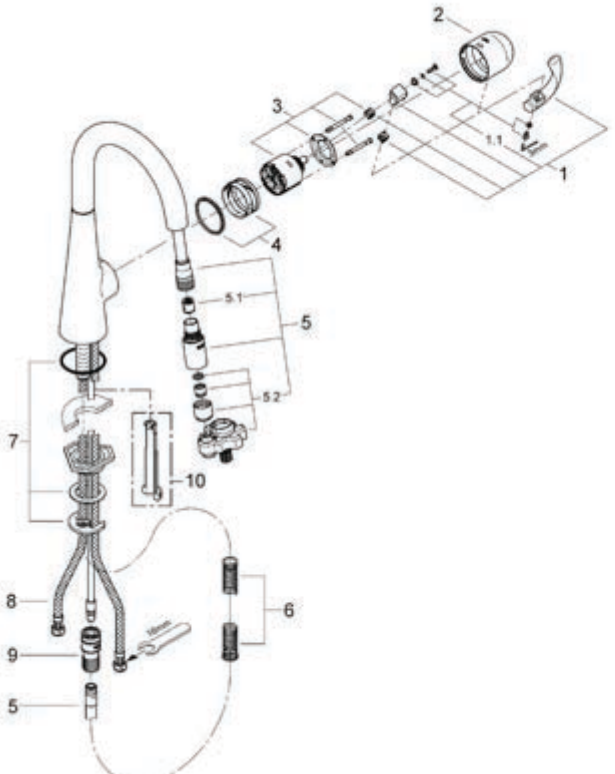

Pos.-nr.	Prod. description	Order-nr.	Units per package
1	Lever	46654 000	1
1.1	Fixing set	46310 000	5
2	Cap	46655 000	1
3	Cartridge	46048 000	1
4	Guide and slide ring	46632 V00	1
5	Pull out spray	46592 000	1
5.1	Non-return valve	08565 000	1
5.2	Flow straightener	13997 000	1
6	Return spring	07240 000	1
7	Shank mounting kit	46345 000	1
8	Connection tube	46413 000	1
9	Quick coupling	64999 000	1
	Special Accessoires:		
10	Disassembling key	19132 000	1