EUROCUBE
Four-hole Single-lever Bath Combination
MODEL # 19897

Pure Freude an Wasser

GROHE

GROHE America, Inc | 200 North Gary Avenue, Suite G, Roselle, IL 60172
Phone: +1 (800) 444-7643 | Fax: +1 (800) 225-2778 | us-customerservice@grohe.com

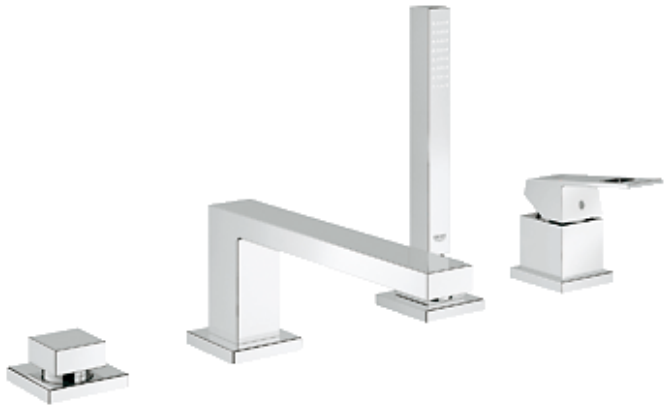

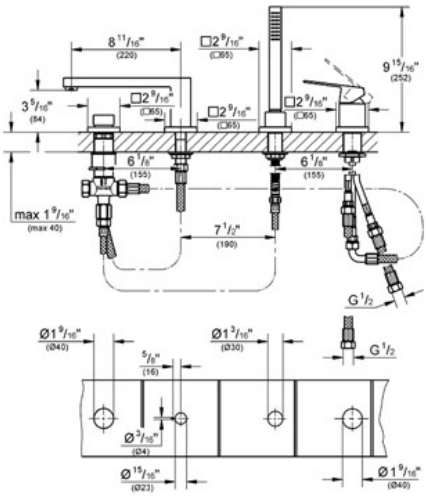

UPC C ®

Product Description:
Four-hole Single-lever Bath Combination

Standard Specification:
- **GROHE StarLight®** finish
- **GROHE SilkMove®** ceramic cartridge
- Metal lever
- Pre-assembled spout mounting
- Bath inlet with flow control
- Diverter bath/shower
- Euphoria Cube hand shower (27 699 000) 2.5 gpm
- 79" metal shower hose
- Stainless Steel Braided Flexible Supplies
- **Protected against backflow**
- Max FLow Rate 6.9 gpm at 45 psi (26.1 L/min), 2.5 gpm (9.5 L/min) for Shower Hand

Applicable Codes & Standards:
- Energy Policy Act of 1992
- ASME A112.18.1/CSA B125.1
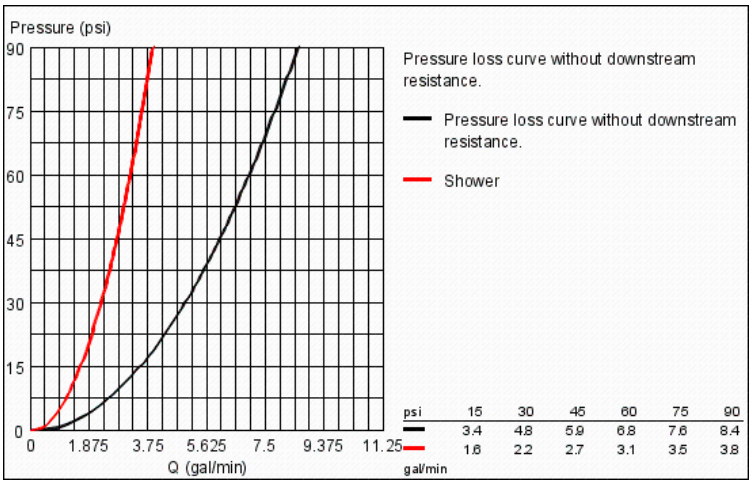
Color:
❑ 19897 000 chrome